

Dot

Item code	**86.OP01.2000.02**
Product type	**Outdoor**
Category	**Pixel Light**
Family	**Dot**
Pictograms	850° · CRI 80 · SDCM 3 · CE · Driver EXCL. · On Off · IP 66

Scheme

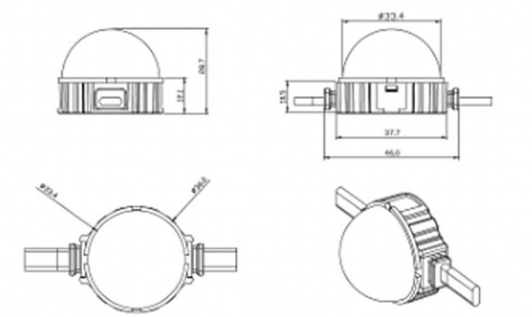

Product	
Real power (W)	**1.44**
Real luminous flux (Lm)	**25.83**
Beam angle (º)	**99.78**
IP	**66**
Average life time (h)	**80000h L70B10**
Colour temperature (K)	**RGB**
Colour consistency (SDCM)	**SDCM3**